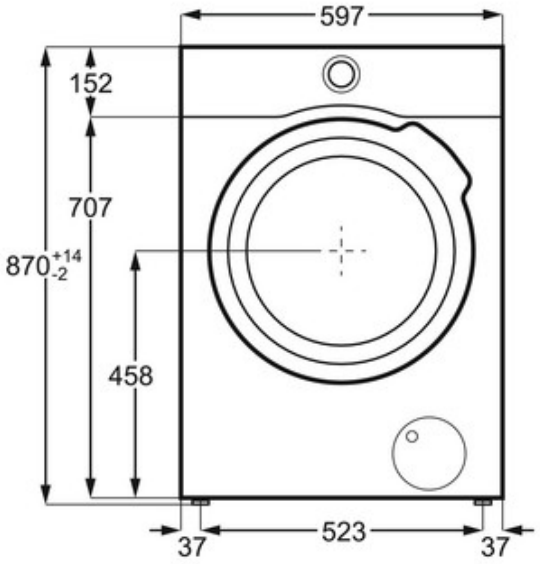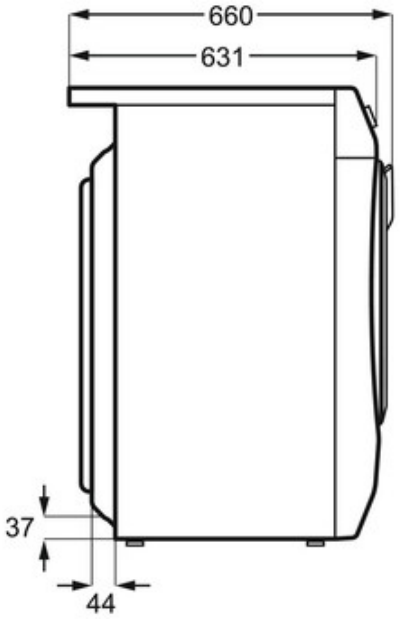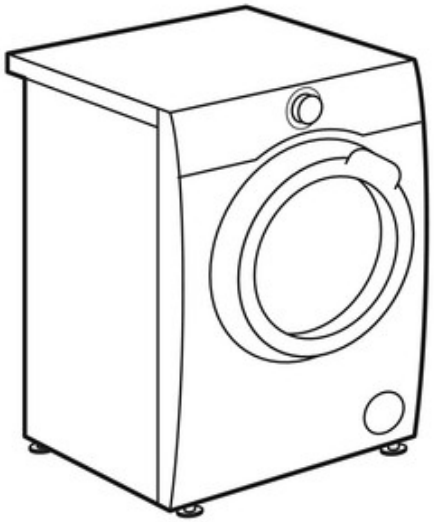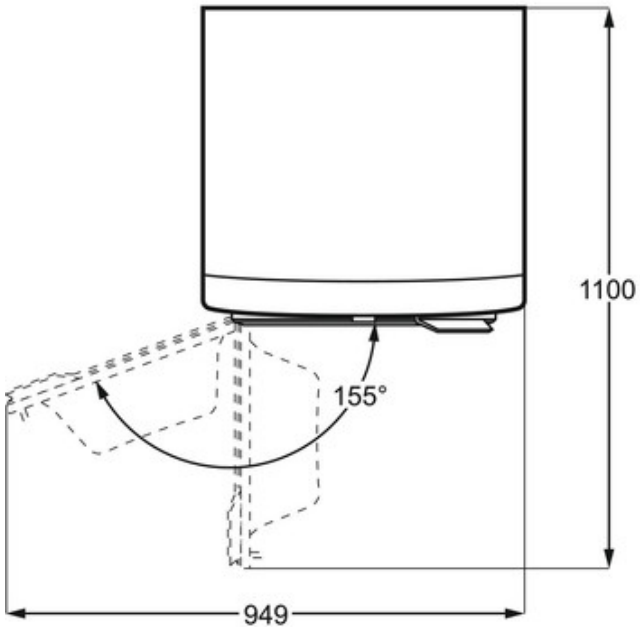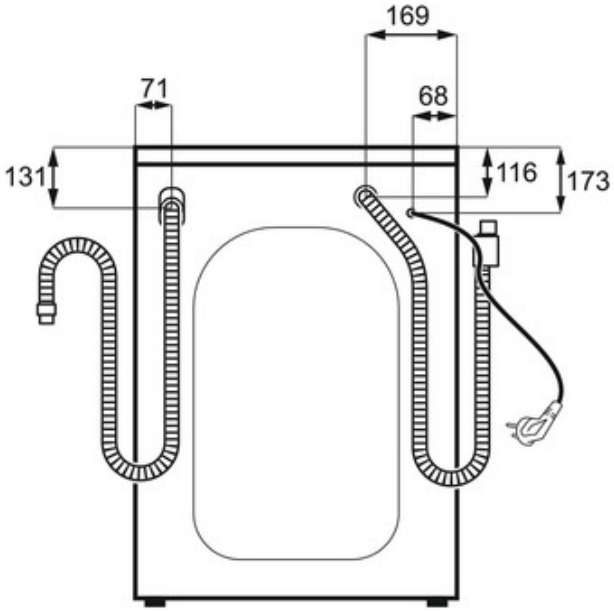PSGBWM180DE0000A